RF Wireless Receiver (Model 0020281 S4MC-DC12)

Feature:

Application: It can be used in industry automation, agriculture automation and home automation, such as factory, house, farm, pasture, vehicle, ship, offshore operation, aerial vehicle, field call, etc. It can remote control equipments on land, water and air, such as remote control lights, sirens, locks, motors, fans, winches, blinds, linear actuators, doors, windows, electric solenoid valves, security alarm, business signs and various devices.
Wireless control, easy to install.
Function of memory: The power is cut off, and then the power is restored, the relay will return automatically to the previous status.
Relay Output: This receiver is relay output, it can be used to operate both DC and AC equipments. The terminals are NO / NC (normally open / normally closed), which serves as a switch. That means you should also connect a separate power supply to equipments.
You can turn on/ off the receiver with transmitter (remote control) from any place within a reliable distance.
Wireless RF signal can pass through walls, floors, doors or windows.
With reverse power protection and over current protection.
Reliable control: The receiver only works with the transmitter which use same code.
One/several transmitters can control one/several receivers simultaneously.
You can use two or more units in the same place.

Receiver Parameters:

Model No.: S4MC-DC06 / S4MC-DC09 / S4MC-DC12 / S4MC-DC24
Power Supply (Operating Voltage): DC6V (S4MC-DC06), DC9V±1V (S4MC-DC09), DC12V±1V (S4MC-DC12), DC24V±2V (S4MC-DC24)
Output: Relay output (Normally open and normally closed)
Working Voltage Range of Relay: AC110~240V or DC0~28V
Working Frequency: 315MHz / 433MHz
Channel: 4 CH
Control Modes: Toggle, Latched
Static Current: ≤6mA
Maximum Working Current: 5A / each channel
PCB size: 68mm x 48mm x 20mm
Case size: 75mm x 55mm x 30mm
Work with Fixed code transmitters or Learning code transmitters.

Matching Transmitters:

The receiver can work with different transmitters, such as model CWB-4(50M, waterproof), C-4/C-4L (100M), CP-4/CP-4L (500M), CB-4/CB-4L (1000M), or CBW-4(1000M, waterproof) etc.

Working Range:

With a transmitter (such as C-4) to form a complete set, the maximum working distance can reach 100M in an open ground.
The maximum working distance is a theoretical data; it shall be operated in an open ground, no barriers, no any interference. But in the practice, it will be hindered by trees, walls or other constructions, and will be interfered by other wireless signals. Therefore, the actual distance may not reach this maximum working distance.
If you want to have a further working range, you can install an external antenna to the receiver, and you also can use a powerful transmitter, such as CB series transmitters.

Usage:

The receiver can be used to control both DC 0~28V and AC 110~240V equipments.
Notice: The receiver is relay output, not DC/AC power output. Initial state of relay output terminals: Terminals B and C are Normally Open; Terminals A and B are Normally Closed.

Wiring:

If you want to control a DC 12V lamp, do as following:
1) Connect the positive pole of DC power supply to terminal “+” of INPUT, and connect the negative pole of DC power supply to terminal “-” of INPUT.
2) Connect terminal C to the positive pole of DC power supply, connect terminal B to the positive pole of DC lamp, and connect the negative pole of DC lamp to the negative pole of DC power supply.

If you want to control an AC 220V lamp, do as following:
1) Connect the positive pole of DC power supply to terminal “+” of INPUT, and connect the negative pole of DC power supply to terminal “-” of INPUT.
2) Connect terminal C to the live wire of AC power supply, connect terminal B to one side of AC lamp, and connect another side of AC lamp to the neutral wire of AC power supply.

Setting different control modes:

Setting different control modes: (We have set the receiver in toggle mode before delivery, if you want to use other modes, do as following operation.)

Setting control mode Toggle (with the transmitter C-4): Only connect Jumper-2.
Control mode Toggle (Channel 1~4): Press -> On; Press again -> Off.
Press button 1: Turn on relay 1 (connect B and C, disconnect A and B), the lamp 1 is on.
Press button 1 again: Turn off relay 1 (disconnect B and C, connect A and B), the lamp 1 is off.
……
Press button 4: Turn on relay 4 (connect B and C, disconnect A and B), the lamp 4 is on.
Press button 4 again: Turn off relay 4 (disconnect B and C, connect A and B), the lamp 4 is off.

Setting control mode Latched (with the transmitter C-4): Disconnect Jumper-1 and Jumper-2.
Control mode Latched (Channel 1~4): Press -> On, other relays Off; Press other button -> Off.
Press button 1: Turn on relay 1 (connect B and C, disconnect A and B), the lamp 1 is on.
Turn off other relays (disconnect B and C, connect A and B), other lamps are off.
Press button 4: Turn on relay 4 (connect B and C, disconnect A and B), the lamp 4 is on.
Turn off other relays (disconnect B and C, connect A and B), other lamps are off.

Function of memory:
When the relay is on the status of "ON", it will shift to the status of "OFF" when the power is cut off.
Once the power is restored, the relay will return automatically to the previous status of "ON".

How to pair the transmitter to the receiver:
1) Press the learning button of receiver for 1- 2 seconds; signal LED on the receiver is on. The receiver enters into status of LEARNING.
2) Press any one button on transmitter. If signal LED flashes quickly 15 times and turns off, it means learning is successful.
3) When receiver is in the status of LEARNING, press again the learning button, signal LED turns off, learning process will be discontinued.
4) The receiver can learn several remote controls with different codes.

Delete all transmitters:
We have learned remote control to the receiver. If you don't want the receiver to work with the remote control, you can delete all codes of remote controls, which are stored in the receiver.
Operation: Press and hold the learning button of receiver until signal LED flashes slowly; release the button, LED keeps slow flash. That means all stored codes have been deleted successfully.

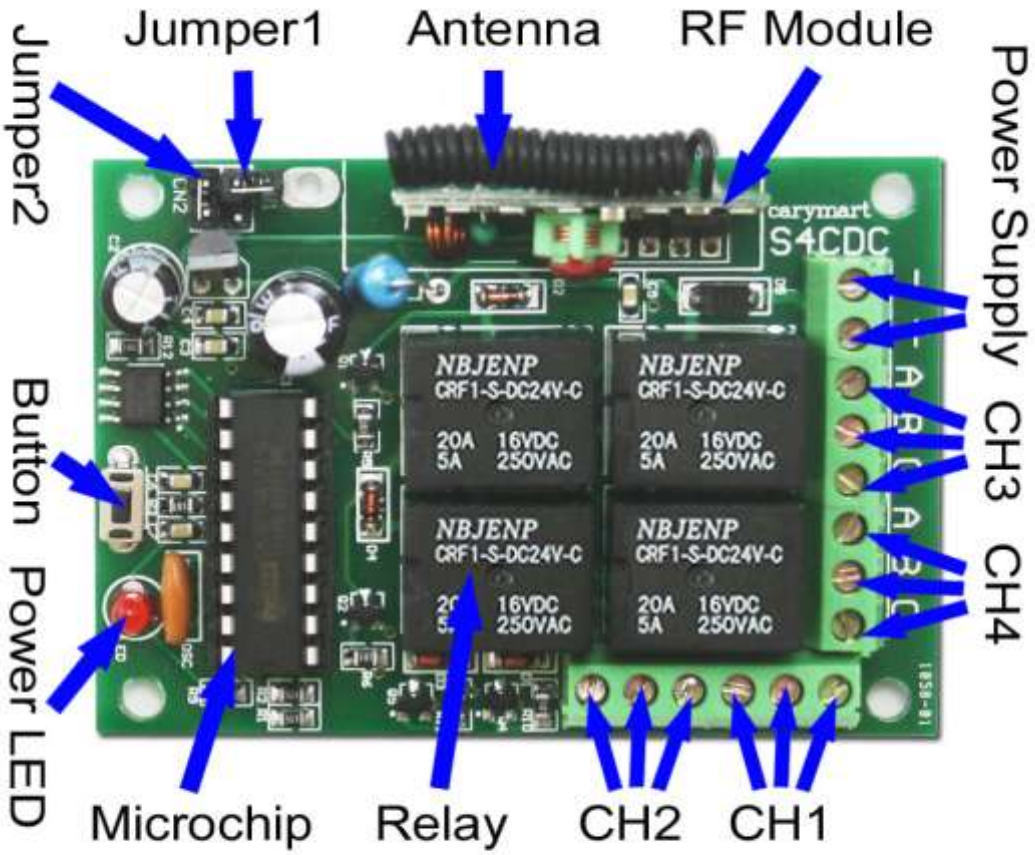

A,B=Normally Closed;B,C=Normally Open.

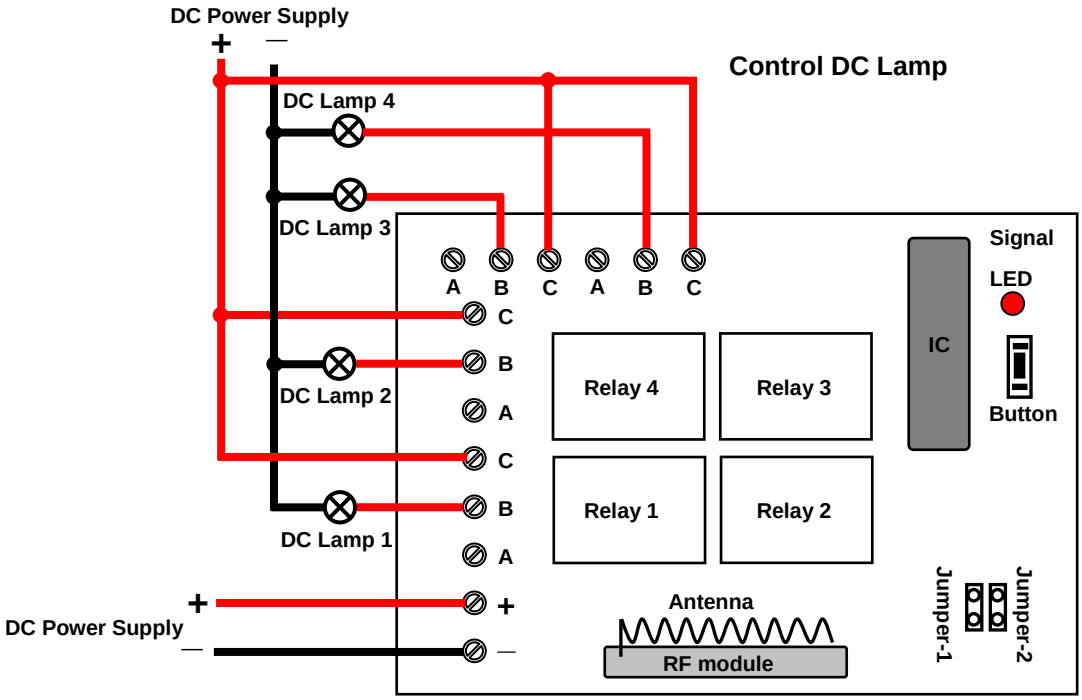

A, B=Normally Closed; B, C=Normally Open.

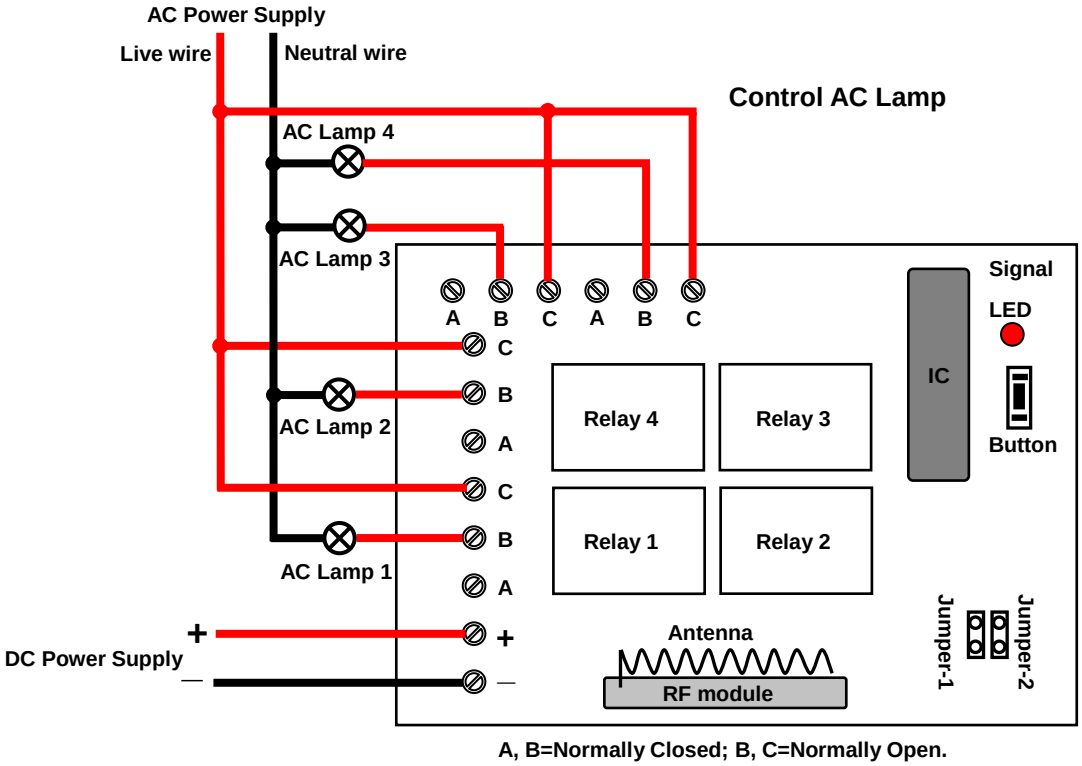

A, B=Normally Closed; B, C=Normally Open.